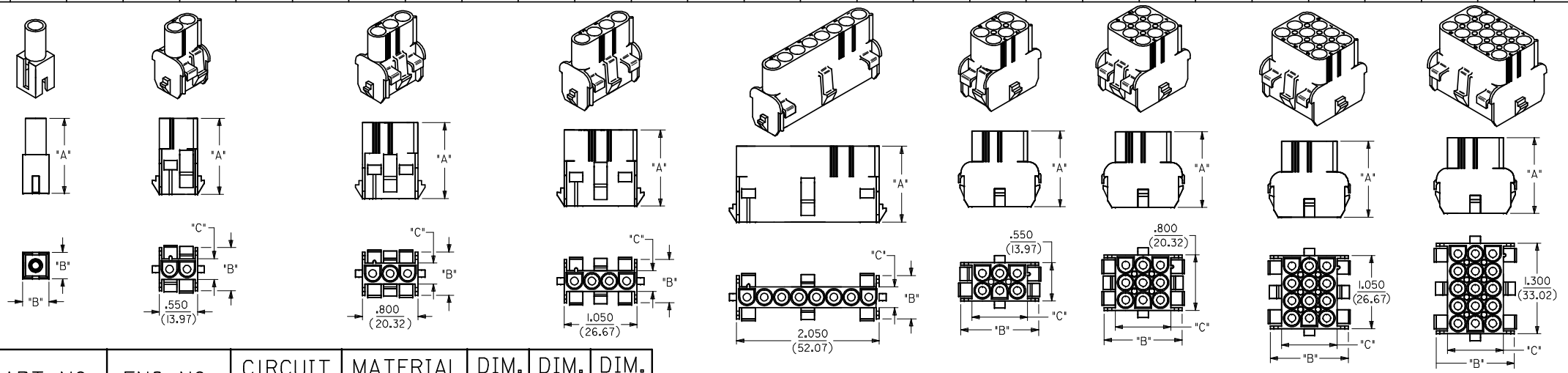

PART NO.	ENG. NO.	CIRCUIT SIZE	MATERIAL (SEE NOTE 1)	DIM. "A"	DIM. "B"	DIM. "C"
050-84-2010	42022-1A	1	A	1.090 (27.70)	.380 (9.65)	----
050-84-2011	42022-1B	1	B			
050-84-2012	42022-1C	1	C			
366440001	36644-001	1	D			
050-84-2020	42022-2A	2	A	1.090 (27.70)	.620 (15.75)	.300 (7.62)
050-84-2021	42022-2B	2	B			
050-84-2022	42022-2C	2	C			
366440002	36644-002	2	D			
050-84-2030	42022-3A	3	A	1.090 (27.70)	.620 (15.75)	.300 (7.62)
050-84-2031	42022-3B	3	B			
050-84-2032	42022-3C	3	C			
366440003	36644-003	3	D			
050-84-2040	42022-4A	4	A	1.090 (27.70)	.620 (15.75)	.300 (7.62)
050-84-2041	42022-4B	4	B			
050-84-2042	42022-4C	4	C			
366440004	36644-004	4	D			
050-84-2060	42022-6A	6	A	1.090 (27.70)	1.120 (28.45)	.800 (20.32)
050-84-2061	42022-6B	6	B			
050-84-2062	42022-6C	6	C			
366440005	36644-005	6	D			
PRELIMINARY	42022-8A	8	A	1.090 (27.70)	.620 (15.75)	.300 (7.62)
PRELIMINARY	42022-8B	8	B			
PRELIMINARY	42022-8C	8	C			
050-84-2090	42022-9A	9	A	1.090 (27.70)	1.120 (28.45)	.800 (20.32)
050-84-2091	42022-9B	9	B			
050-84-2092	42022-9C	9	C			
366440006	36644-006	9	D			
050-84-2120	42022-12A	12	A	1.090 (27.70)	1.120 (28.45)	.800 (20.32)
050-84-2121	42022-12B	12	B			
050-84-2122	42022-12C	12	C			
366440007	36644-007	12	D			
050-84-2150	42022-15A	15	A	1.090 (27.70)	1.120 (28.45)	.800 (20.32)
050-84-2151	42022-15B	15	B			
050-84-2152	42022-15C	15	C			
366440008	36644-008	15	D			

LEGEND:

42022-✳✳
- BASE NUMBER
- MATERIAL CODE (SEE NOTE 1)
- CIRCUIT SIZE

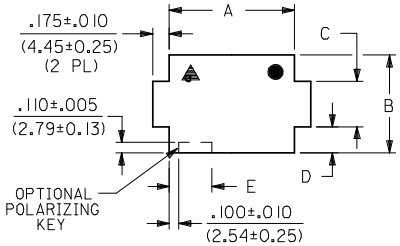

RECOMMENDED PANEL CUTOUT

PANEL THICKNESS: .030-.090/(0.76-2.29)
(SEE NOTE 6)

CIRCUIT SIZE	DIMENSIONS				
	A ±.005	B ±.005	C ±.010	D ±.010	E ±.010
2	.565 (14.35)	.530 (13.46)	.340 (8.64)	.095 (2.41)	.250 (6.35)
3	.815 (20.70)	.530 (13.46)	.340 (8.64)	.095 (2.41)	.250 (6.35)
4	1.065 (27.05)	.530 (13.46)	.340 (8.64)	.095 (2.41)	.250 (6.35)
6	.565 (14.35)	1.030 (26.16)	.480 (12.19)	.275 (6.99)	.250 (6.35)
8	2.065 (52.45)	.530 (13.46)	.340 (8.64)	.095 (2.41)	.250 (6.35)
9	.815 (20.70)	1.030 (26.16)	.480 (12.19)	.275 (6.99)	.250 (6.35)
12	1.065 (27.05)	1.030 (26.16)	.480 (12.19)	.275 (6.99)	.350 (8.89)
15	1.315 (33.40)	1.030 (26.16)	.480 (12.19)	.275 (6.99)	.350 (8.89)

▲ - CIRCUIT #1 LOCATION WHEN USING POLARIZING KEY OPTION WITH 2, 3, 4 AND 8 CIRCUIT HOUSINGS.

● OPTION WITH 6, 9, 12 AND 15 CIRCUIT HOUSINGS.

NOTES:

1) MATERIAL CODES:
   "A"= NYLON TYPE 6/6, 94V-2
   COLOR: NATURAL (WHITE/TRANSLUCENT)
   "B"= NYLON TYPE 6/6, 94V-0
   COLOR: (BRICK RED)
   "C"= NYLON TYPE 6/6 94V-0
   COLOR: NATURAL (WHITE)
   D = NYLON PA6,94V-2
   COLOUR-NATURAL,899921279
   FOR GLOW WIRE APPLICATION WITH
   CTI OF 325 VOLTS,AS PER IEC-60335-1 4TH EDITION
2) UNLESS OTHERWISE INDICATED, DIMENSIONS ARE FOR REFERENCE ONLY.
3) CAP HOUSINGS MATE WITH :
   - PLUG HOUSINGS, .084/(2.13) DIA. SERIES: (42021-✳✳)
4) HOUSINGS DESIGNED TO BE USED WITH TERMINALS:
   - PINS, .084/(2.13) DIA. SERIES: (42023-✳✳✳✳)
   - SOCKETS, .084/(2.13) DIA. SERIES: (42024-✳✳✳✳)
5) CONTACTS ARE ON .250/(6.35) GRID CENTERLINE SPACING.
6) PANEL TO BE PUNCHED SO THAT THE HOUSING ENTERS THE PANEL OPPOSITE THE SIDE WITH THE BURR (I.E. OPPOSITE THE BREAK SIDE).
7) PRODUCT SPECIFICATION PS-42022-0001 APPLIES.
8) LEGEND SCHEME IS NOT APPLICABLE FOR GLOW WIRE COMPATIBLE PART NUMBERS

REV	DESCRIPTION
D	NEW RAW MAT ADDED SEE NOTE 1 "D" I2008-0197
C	DIM "A" 1.080 & 27.43 CHANGED TO 1.090 & 27.70. I2005-0250 SSUDHIR 2004/11/03
B	ADD BLK TOL UCR1998-0296 KSS 98-6-8

ENTER DESCRIPTION
EC NO: I2008-0611
DRWN:SJ 2008/05/14
CHK:DKPRASAD 2008/05/16
APPR:KPRASAD 2008/06/02
REV D1

QUALITY SYMBOLS: ▼=0 ▽=0

GENERAL TOLERANCES (UNLESS SPECIFIED)

	mm	INCH
4 PLACES	±---	±---
3 PLACES	±---	±0.10
2 PLACES	±0.25	±0.14
1 PLACE	±0.36	±---
ANGULAR	±---°	

DRAFT WHERE APPLICABLE MUST REMAIN WITHIN DIMENSIONS

DIMENSION STYLE: IN/MM
SCALE: ---
DESIGN UNITS: INCH
THIRD ANGLE PROJECTION

		DATE
DRAWN BY	RK	87/11/15
CHECKED BY	GWF	87/11/15
APPROVED BY	GWF	87/11/15

TITLE: HOUSING, CAP .084/(2.13) DIA. SERIES

MOLEX INCORPORATED

MATERIAL NO.: SEE CHART
DOCUMENT NO.: SD-42022-✳✳
SHEET NO.: 1 OF 00
SIZE: A0

THIS DRAWING CONTAINS INFORMATION THAT IS PROPRIETARY TO MOLEX INCORPORATED AND SHOULD NOT BE USED WITHOUT WRITTEN PERMISSION